SAMPLE SCHEMATIC : DRAWING REFERENCE : pa- matrix 2

SAMPLE APPLICATION FOR FULL MATRIX SETUP IN SMALL HOTEL OR SIMILAR APPLICATIONS

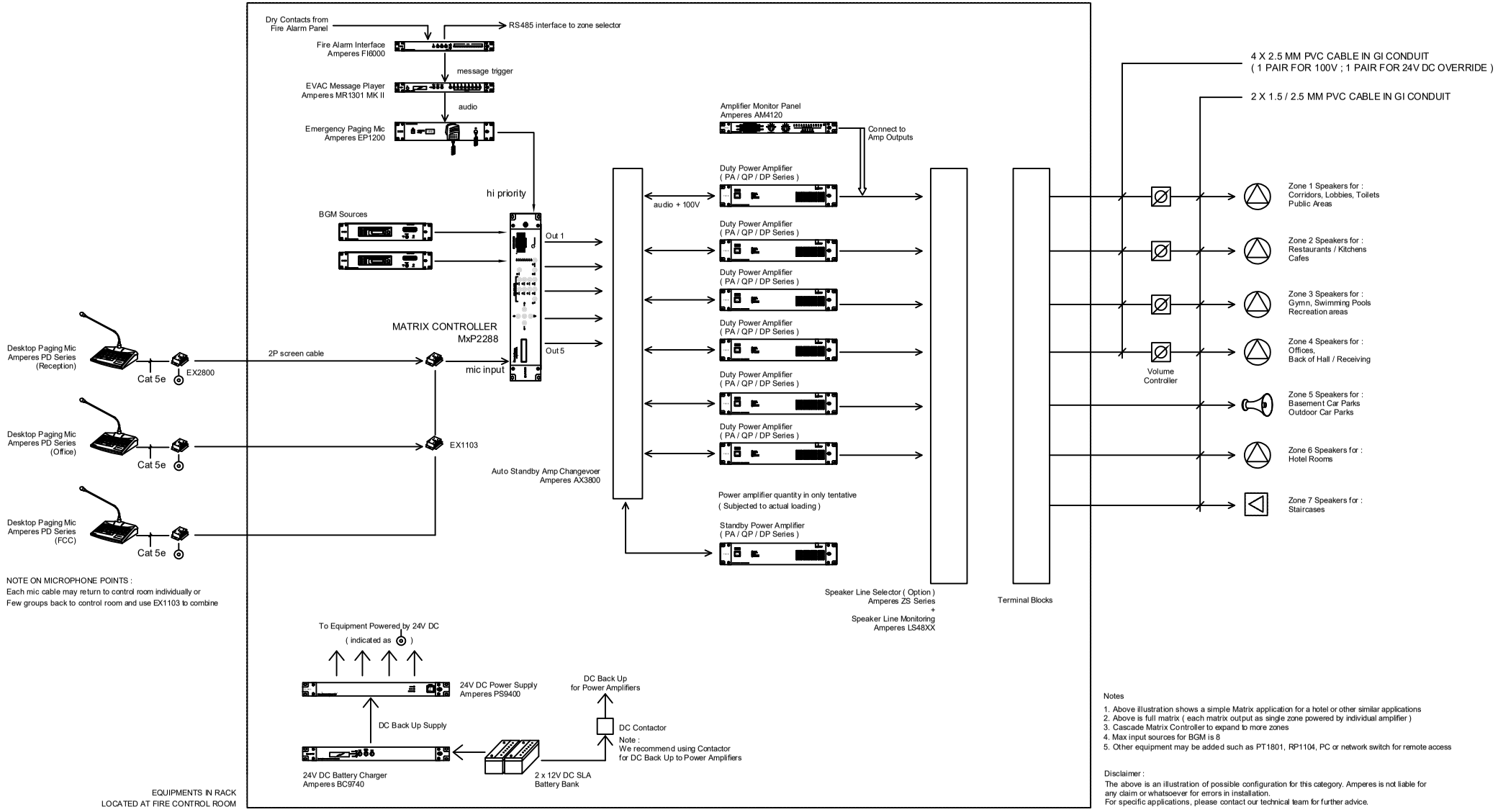

Notes

1. Above illustration shows a simple Matrix application for a hotel or other similar applications
2. Above is full matrix (each matrix output as single zone powered by individual amplifier)
3. Cascade Matrix Controller to expand to more zones
4. Max input sources for BGM is 8
5. Other equipment may be added such as PT1801, RP1104, PC or network switch for remote access

Disclaimer :
The above is an illustration of possible configuration for this category. Amperes is not liable for any claim or whatsoever for errors in installation.
For specific applications, please contact our technical team for further advice.